Current part is item (18) on diagram. Available at www.oshkoshequipment.com

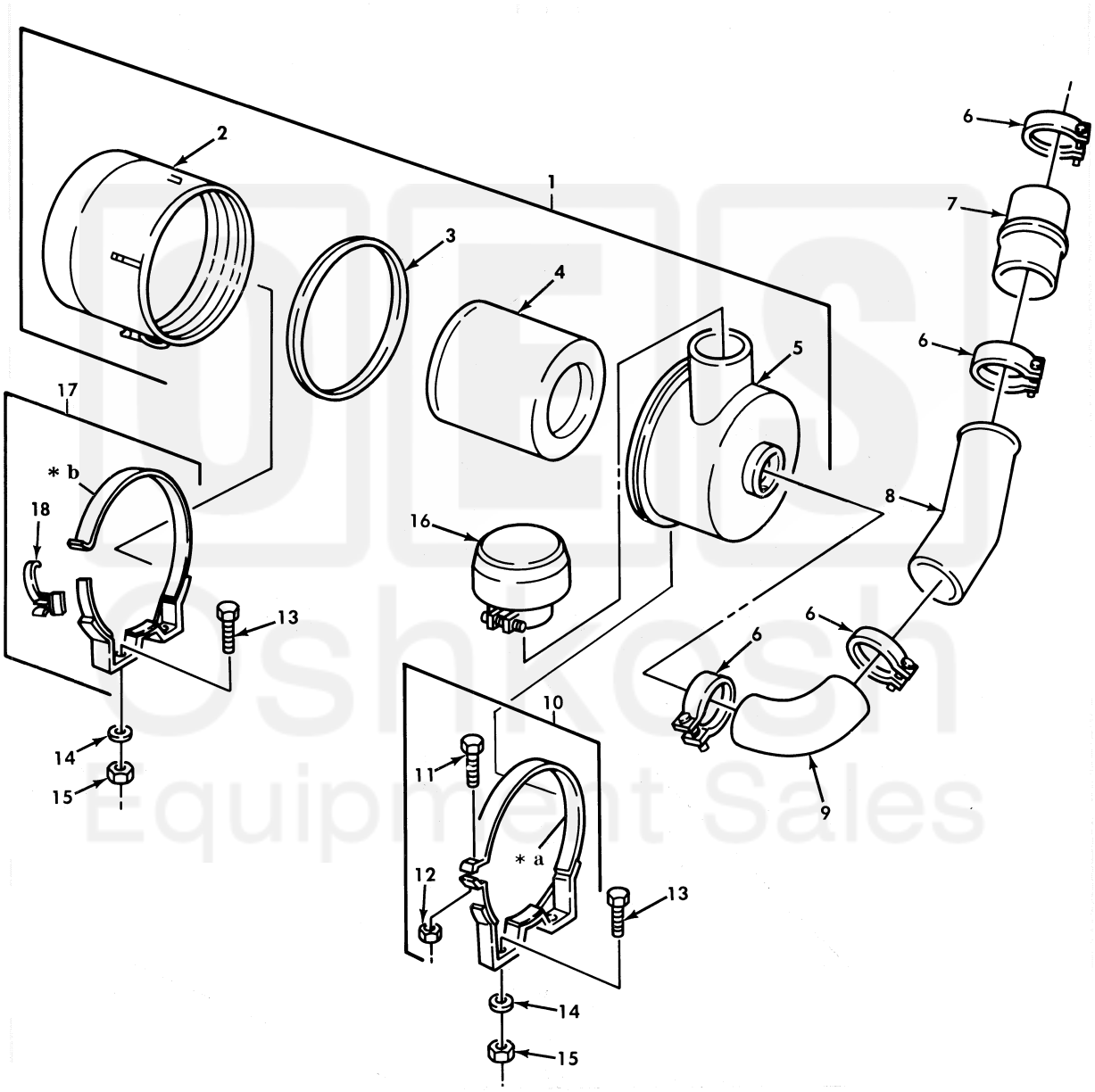

*** a PART OF ITEM 10**
*** b PART OF ITEM 17**

Figure 40. Air Cleaner Assembly.

Current part is item (18) on diagram. Available at www.oshkoshequipment.com

Current part is item (18) on diagram. Available at www.oshkoshequipment.com

(1) ITEM NO	(2) SMR CODE	(3) NSN	(4) CAGEC	(5) PART NUMBER	(6) DESCRIPTION AND USABLE ON CODE (UOC)	(7) QTY
					GROUP 0304 AIR CLEANER	
					FIG. 40 AIR CLEANER ASSEMBLY	
1	PAOOO	2940-00-197-5364	19207	11604557	AIR CLEANER,INTAKE.....	1
2	PAOZZ	2940-00-134-8326	19207	11648617	.AIR CLEANER,INTAKE.....	1
3	PAOZZ	5330-00-432-2142	19207	11604520-5	.PACKING,PREFORMED PART OF KIT P/N 5702838.....	1
4	PAOZZ	2940-00-134-4657	19207	11604545	.FILTER ELEMENT,INTA PART OF KIT P/N 5702838.....	1
5	XAOZZ		19207	11664491	.AIR CLEANER,INTAKE.....	1
6	PAOZZ	4730-00-244-9862	18076	MS21920-45	CLAMP,HOSE.....	4
7	PAOZZ	4720-00-477-8933	26151	236-0317	HOSE,PREFORMED.....	1
8	PAOZZ	4710-00-134-4230	19207	11664548	TUBE,BENT,METALLIC.....	1
9	PAOZZ	4720-00-134-4655	19207	11664545	HOSE,PREFORMED.....	1
10	PAOZZ	2940-00-197-5366	19207	11664234	STRAP ASSEMBLY.....	1
11	PAOZZ	5305-00-225-9092	96906	MS90726-37	.SCREW,CAP,HEXAGON H.....	1
12	PAOZZ	5310-00-982-4912	96906	MS21045-5	.NUT,SELF-LOCKING,HE.....	1
13	PAOZZ	5305-00-709-8523	80204	B1821BH044F125N	SCREW,CAP,HEXAGON H.....	6
14	PAOZZ	5310-00-809-4085	96906	MS27183-16	WASHER,FLAT.....	6
15	PAOZZ	5310-00-274-9364	96906	MS21045-7	NUT,SLFLKG,HEXAGON.....	6
16	PAOZZ	2590-00-911-5632	18265	GAH00-0248	CAP,AIR CLEANER.....	1
17	PAOZZ	5342-00-197-5368	19207	11664235	BRACKET,MOUNTING,AI.....	1
18	PAOZZ	5342-00-833-1236	19207	11602023	.LATCH,INTAKE AIR CL.....	1

END OF FIGURE

Current part is item (18) on diagram. Available at www.oshkoshequipment.com